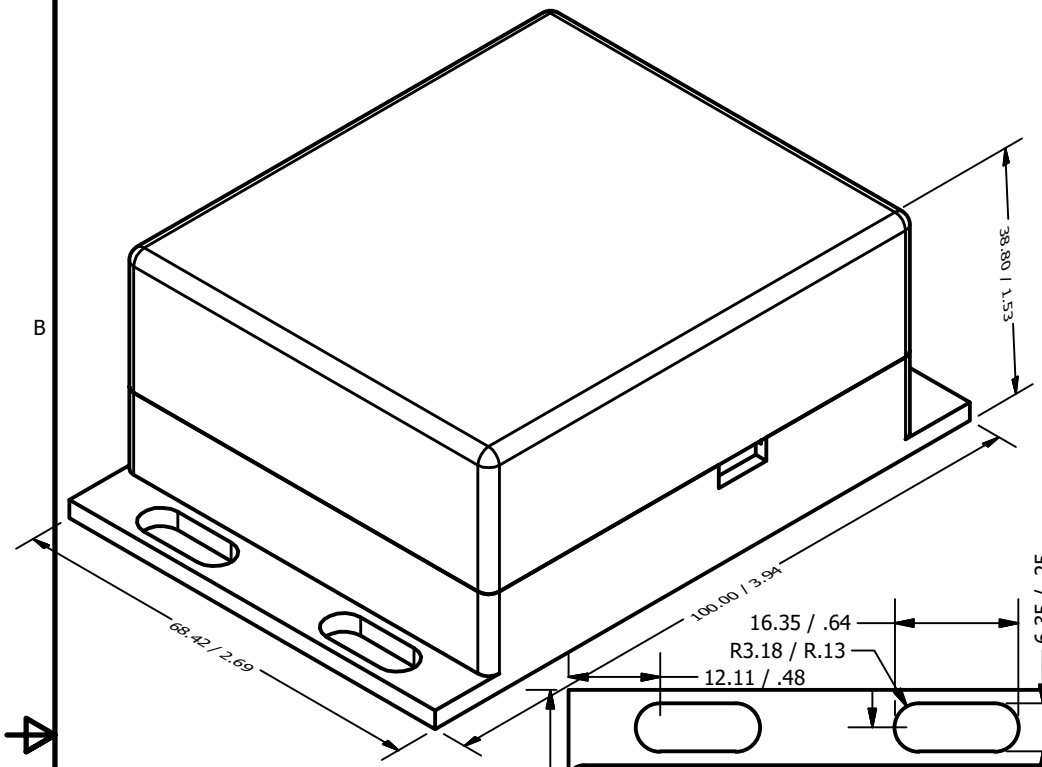

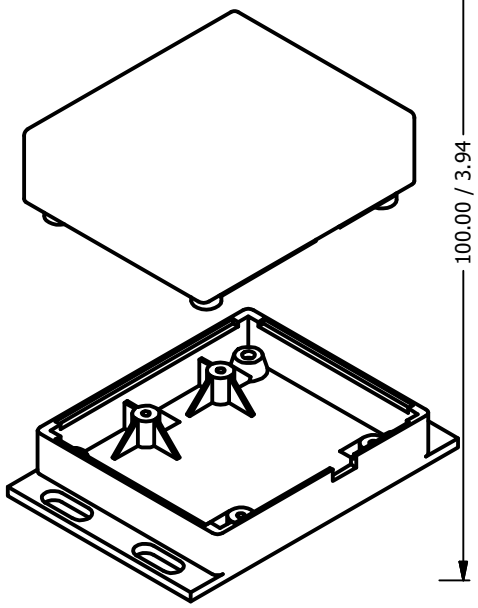

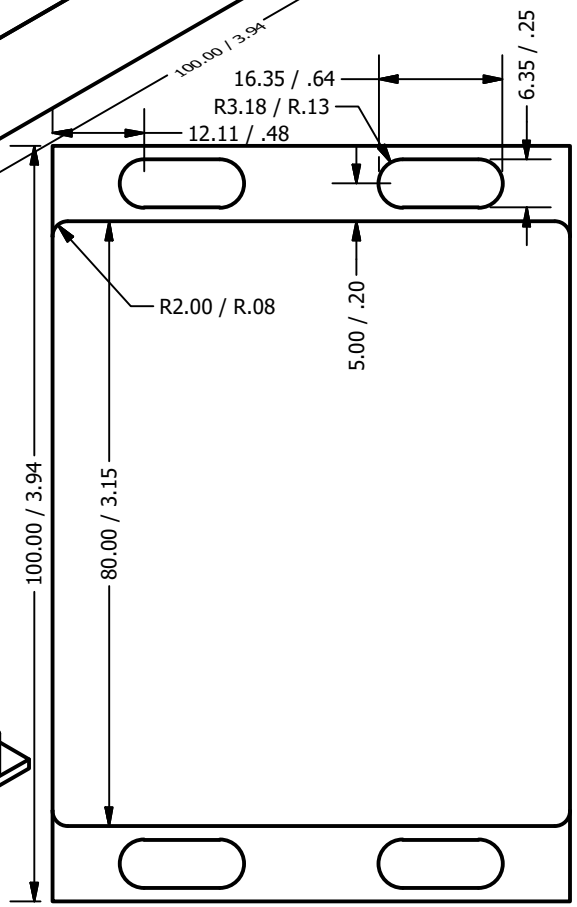

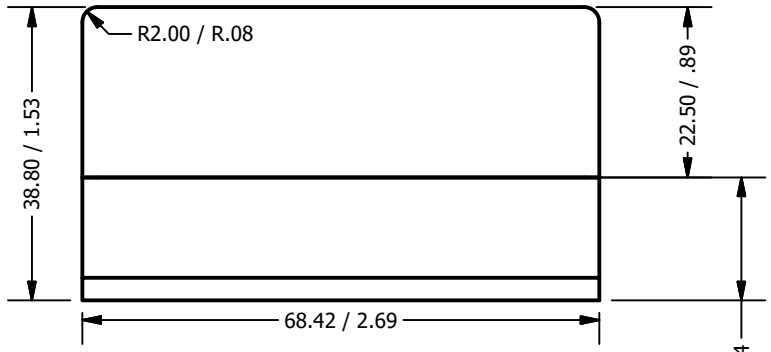

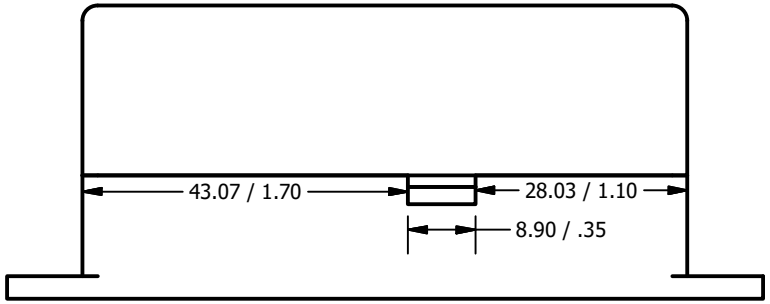

DRAWN jpef0	7/31/2018				
CHECKED		TITLE			
QA					
MFG					
APPROVED					
	Custom	SIZE Size	(inches)	DWG NO enclosurelensdrawing	REV
		SCALE 1		SHEET 1 OF 1	